GODDARD NEWS

GODDARD SPACE FLIGHT CENTER / GREENBELT, MARYLAND

VOLUME III, NUMBER 11 — THE NATIONAL AERONAUTICS AND SPACE ADMINISTRATION — NOVEMBER 19, 1962

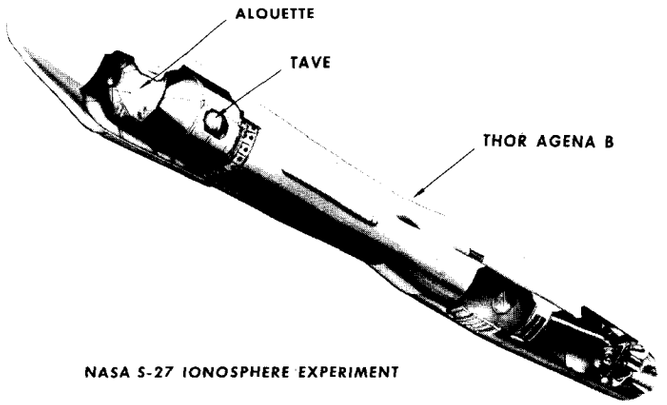

NASA S-27 IONOSPHERE EXPERIMENT

TAVE Performance Demonstrates Success of Goddard Team Effort

At 4 p.m. Aug. 10, 1962, Dr. John Townsend, Jr., assistant director for space sciences and satellite applications, gave approval to undertake a project of high priority. Urgency of the project was caused by the need to obtain in-flight data on vibration environment of the Thor-Agena B launch vehicle.

On Aug. 24, a 200-pound vibration experiment payload was completed and ready to fly piggyback with Canada's Alouette Topside Sounder spacecraft aboard the Thor Agena B.

In only 14 days, a group of Goddard engineers and craftsmen had developed TAVE (Thor Agena Vibration Experiment) from an idea into a flight-qualified payload.

Team Effort

The six-member "team," coordinating the efforts of 40 or more Goddard personnel, designed, built and tested the spacecraft to the usual rigid specifications required of Goddard payloads.

"The physical dimensions used to develop TAVE were considered the maximum limitations which would be required of any payload going in TAVE's position as a secondary Thor Agena spacecraft," said Carl Wagner, design engineer.

In the process of meeting the 20-day delivery deadline, the Goddard group

- Worked approximately 1 man-year
- Traveled more than 75,000 miles
- Finished the job a day ahead of schedule, and
- Had time to spare for rechecking, additional calibrations and touch-up painting.

Today, TAVE's performance has demonstrated that the long hours, professional skills and concerted energies of a Goddard team effort pay off in valuable dividends.

"TAVE gave us data verifying the techniques used by Goddard and Lockheed in predicting the launch vibration environment of the Thor Agena B rocket," said James Nagy, project experimenter.

"Demonstration that these techniques were sound are most important in designing future experiments and structures for Thor Agena vehicles," he said.

The prime mission of TAVE was to measure low frequency vibration inputs to the payloads during the Thor boost phase.

Predictions Verified

The data verified the transmissability of the Thor low frequency thrust resonance through the Agena stage and into the spacecraft interfaces.

As a bonus, TAVE supplied additional data showing:

- Elastic rebound or longitudinal oscillation of the

(Cont'd on page 8, col. 4)

Award $12 Million Contracts To Change Tracking Network

Award of contracts totaling approximately $12 million for the modification of NASA's tracking network in support of future manned space flights has been made by Goddard.

Long duration manned space flights to develop rendezvous-docking techniques will require a more complex ground support system than that used for previous manned space flights. The technical requirements for tracking two space vehicles simultaneously (spacecraft and launch vehicle) with great accuracy dictate more comprehensive tracking equipment. Manned long duration flights require improvement in data acquisition, communications and command capabilities.

The four contracts included in this award will provide various world wide NASA stations, tracking acquisition aids and digital radio frequency (RF) command systems.

Equipment and services to be provided are:

- Tracking Antenna Acquisition Aid Systems: Canogo Electronics Corporation, Van Nuys, Calif., $1,045,500.
- Digital Command Encoders: Radiation, Inc., Melbourne, Fla., $1,950,000.
- RF Command Systems: Collins Radio Corporation, Dallas, Texas, $1,725,000.
- PCM Systems: Electro Mechanical Research Corporation, Sarasota, Fla., $7,376,379.

Contract costs for all new systems include manufacture, installation, documentation, and training of personnel.

The PCM systems will be used to receive, in "real-time," the instrumentation measurements sent to the ground stations from the spacecraft and vehicle. The new digital command encoders and RF Command Systems will enable each station to transmit information and commands to the spacecraft.

—POGO—

Contracts totaling $360,000 to design and build experiments for the Polar Orbiting Geophysical Observatory (POGO) have been awarded by Goddard to six U. S. universities.

Two contracts each were awarded to the Universities of Michigan and Minnesota. Michigan received $140,000 contracts for a neutral particle and ion composition experiment, and a galactic emission experiment. Both experiments eventually will require expenditures totaling about $785,000.

(Cont'd on page 8, col. 1)

Dr. Lipschutz Gets Nininger Award

"On the Origin of Diamonds in Iron Meteorites," a paper by Dr. Michael Lipschutz of the astrochemistry section, has earned for him a $500 share of the first Nininger Meteorite award.

Dr. Lipschutz

Receiving the other $500 share was Craig Merrihue of the University of California for his paper "Meteorite Xenon and the Origin of the Meteorites."

The award is made for the best written presentation on meteorites based on original research by an undergraduate or graduate student in an American university. Purpose of the award is to stimulate interest in research in meteoritics as an important phase of current investigations in space exploration. Dr. Lipschutz did the research for the paper while a Ph.D. student at the University of Chicago.

The award was established as the result of the sale of part of a collection of meteorites by Dr. H. H. Nininger to Arizona State university, which purchased them under a government grant. The other half of the collection was bought by the British Museum.

Mother-Daughter Experiment Is New Approach To Studying Ionospheric Particles

Development of a new technique for studying the interplanetary plasma is the object of a current Goddard project.

The new approach involves using two spacecraft flying side by side to measure the concentration of ionospheric particles in space between them.

The concept of this configuration—called a Mother-Daughter experiment—was first suggested several years ago by Dr. Joseph Kane, physicist in the planetary ionospheres branch. Almost simultaneously Dr. John Nisbet of the ionospheric research laboratory at Penn State proposed a two-vehicle configuration for determining the same ionospheric parameters, but based upon a different measuring technique.

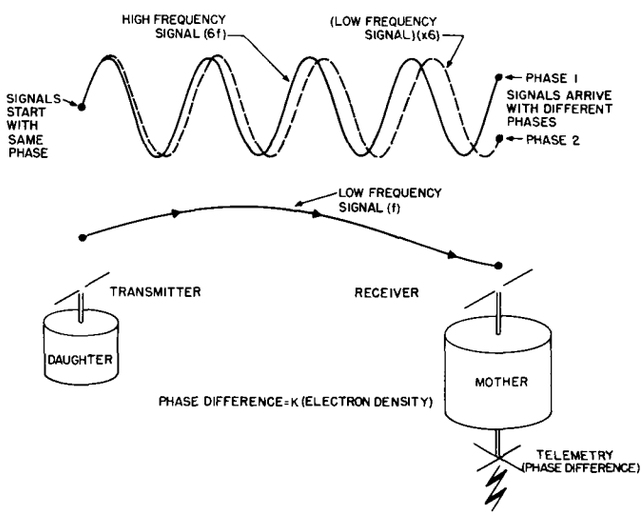

PRINCIPLE OF MOTHER-DAUGHTER EXPERIMENT

Long range goal of the new approach is to measure the concentration of ionospheric particles in deep space and near other planets, said Robert Bourdeau, head of the planetary ionospheres branch.

Ionospheric particles differ from Van Allen belt particles in two ways. There are many more ionospheric than Van Allen particles and they are of lower energy—one-tenth of an electron volt up to several volts, as compared to thousands, millions or billions of volts in the Van Allen particles. Information about the number of low-energy electrons is important because these particles are the ones which influence radio communications.

Present Methods Out

Existing techniques in the experimental arsenal were considered inadequate for obtaining data on extremely low concentration ionospheric particles such as are found in interplanetary space, said Mr. Bourdeau.

One present technique for sampling particles, through low energy plasma probes, i.e., traps to capture particles, might not be able to distinguish between the "artificial" particles and space particles. For example, the sun's radiation produces artificial particles on the body of a spacecraft. When they are dislodged, they remain in a cloud swirling about the satellite as it orbits. It would be hard to know where a particle actually originated.

A second technique—transmitting radio signals from a satellite to the earth—would be affected considerably more by near-earth ionospheric particles than by those in deep space. Thus, it has been ruled out.

According to John Jackson, consultant in the planetary ionospheres branch, the basic principle of the Penn State Mother-Daughter experiment is the same as that of the well known two-frequency continuous wave (CW) propagation experiment. In this experiment, harmonically related CW waves are transmitted from a sounding rocket in the ionosphere to a receiving site on the ground.

Increased Accuracy

In the Mother-Daughter version, the receiving site is a second spacecraft only a few thousands of feet away from the transmitter. By performing the experiment over relatively short propagation paths, the accuracy of the measurements can be considerably increased.

The experiment is based upon the fact that radio waves are "stretched" while they propagate in the ionosphere. The effect of the stretching on the lower of two radio frequencies is much greater than the effect on the higher frequency, particularly if the frequency ratio is large.

To compare these effects, waves are used whose frequency ratio is a simple whole number, in this case 6 to 1. When the low frequency signal is received, it is multiplied in frequency by 6 and compared with the high frequency.

In the absence of an ionosphere, there would be no difference between the high frequency and the low frequency multiplied by 6. But in the ionosphere, due to a greater stretching at the low frequency, a net difference or "phase shift" is observed at the receiving end. The phase shift is a measurement of the electron density between the Mother and the Daughter. The phase shift is then telemetered to the ground.

Gradual Development

The Mother-Daughter program is being developed gradually, beginning with Javelin probes to test the experiment, said Mr. Bourdeau. The probes —3 to 4 of them—will be launched in 1963 from Wallops Island to altitudes of 1,000 kilometers (about 620 miles).

"We have enough data on the physics of the experiment to carry out the design for the payload, but we need to establish the mechanical feasibility of the experiment in space," said Mr. Bourdeau.

If successful, the Mother-Daughter experiment will be a strong candidate for the first Orbiting Geophysical Observatory (EGO) project and for missions to other planets, starting with Mars or Venus, to test their ionospheres.

Study work has been completed by Goddard and Penn State. Scientists from Penn State are the principal investigators under a NASA contract. Supporting Penn State in an advisory role on the project are the planetary ionospheres branch for geophysics and the sounding rocket instrumentation branch for technology. Sam DePew, of the space sciences division, is project manager.

Four Multi-purpose Buildings Underway

Ground breaking for four new multi-purpose buildings got underway last week at Goddard.

According to Bill Haggerty of the budget branch the $1,391,000 contract was awarded to Norair Engineering Corporation of Washington, D. C.

Upon completion in late spring 1963, the new buildings —17a, 17b, 17c and 17d—will provide laboratory and office space for the additional personnel required to carry out Goddard's expanded program effort.

"When sufficient office and laboratory space becomes available at the center, these buildings will revert to their initial purpose, warehouse operations," said Herbert J. Fivehouse, chief of management services division.

Building 17a will be located east of the central flight control and range operations laboratory (building 3).

The remaining three buildings, 17b, 17c and 17d, will be located to the northwest of the boiler plant and electrical sub-station (building 4).

Road Work To Facilitate Traffic

Have you been bumpty-bumping to work on the soil conservation service road? Have you been using the temporary "stairway to heaven" leading from building 4 to buildings 5, 7 and 10? If so, this will soon change.

Drummond and Company, Inc., Baltimore, Md. has been awarded a $84,950 contract to improve the soil conservation service road, which is used for Goddard's east gate in front of buildings 7 and 10. In addition, extension of road 6 (between the construction field office building and building 8) and the extension of road 8 (between buildings 4 and 5) will facilitate the flow of traffic in the Center.

Optic Shop Personnel Demonstrate High Skill, Unusual Performance

There was a time not long ago when enough seemingly was known about optics to make further progress in the field unnecessary. The demands placed on the artisan were adequately met and he was capable of meeting the requirements of the day.

Moreover, there was an uncertainty about the future applications of optics and whether their functions could be replaced or even eliminated.

Today, the value of optical science and engineering are no longer in question; they have been thrust into a leading position in the field of space sciences.

Rapid Advancement

The capabilities of machinery, fabrication, and measuring techniques, and the skill of the artisan himself are in a state of advancement unparalleled in the relatively young life of the optics field.

"The 'state of the art' is undergoing a rapid development, but it has a long way to go," said John Larmer, foreman of Goddard's optical shop.

Mr. Larmer speaks from an authoritative position. He has had 31 years experience in the manufacture of precision optics, 30 of them at the Naval Weapons Plant before coming to Goddard in 1961. In addition, the eight men who accompanied him here each have at least 25 years experience. As a group they have a total of 225 years in the field.

During their years at the weapons plant, the group helped the optics shop develop a reputation for being one of the finest in the country.

According to Larmer, it was one unit at N.W.P. that was not disbanded "until the last minute". And even then it remained essentially intact in its move here.

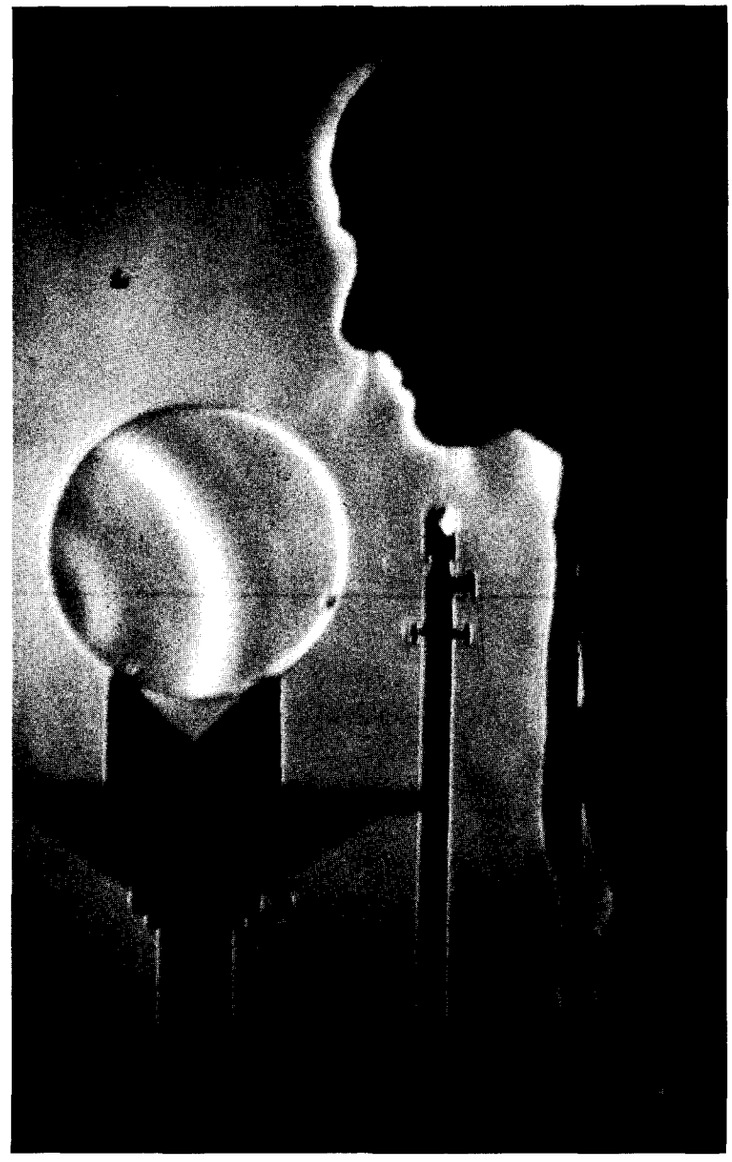

SENSITIVITY of the optical shop's schlieren system is demonstrated by the silhouette and breath of John Larmer, shop foreman, who tests a lens blank. Light and dark rings indicate inhomogeneity characteristics in the lens.

A REFLECTED view taken off a 36-inch schlieren mirror shows optical shop personnel at work at their instruments in the optical test room. This parabolic mirror is part of the largest schlieren system in the country. The system measures the performance factor of various optical components such as parabolas, spheric reflectors and plain and parallel elements.

HOW THE picture above was taken is shown in this sketch of the schlieren system. Lens blank is in the test area at bottom center, light source originates at the far right, and image is created on ground glass at upper left.

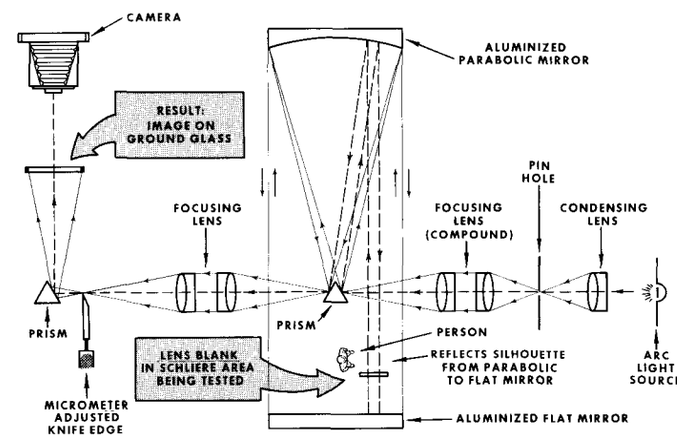

MARTIN WHITE generates a spherical concave surface in black carrara. The surface will join with a torroidal mirror surface which will eliminate stray light in photographing the corona of the sun.

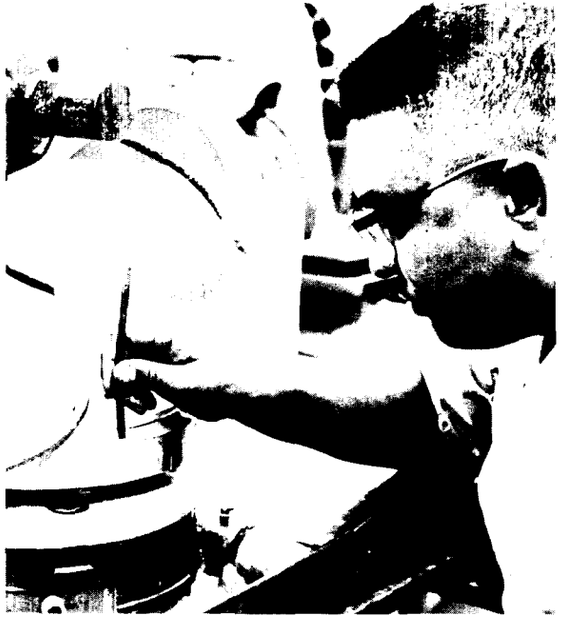

HOWARD MURRAY measures the edge thickness of a spherical lens. The lens is 12 inches in diameter and is being generated with a diamond tool in a milling machine.

A CLOSEUP view shows the factured by the optical shop. in the earth telescope in conj Interplanetary Monitoring Pro

Big Challenge

One of the biggest challenges to optics resulting from the space age is in the infrared and ultraviolet ranges of the electromagnetic spectrum. (The spectrum consists of varying wave lengths from the long radio waves to the extremely short gamma rays found in outer space.)

Aerospace guidance systems rely heavily on optical components operating in the infrared and ultraviolet ranges.

At present, the transmissibility of ordinary glass limits its usefulness to the visible range of the spectrum. But the use of glass—as it's known in the ordinary telescope and camera lens—is being replaced by metals and crystals for advanced optical purposes.

"Crystals, for example, will transmit a wider spectrum band in the infrared and ultraviolet ranges", said Mr. Larmer. "With these materials, the scientist can obtain more data on the conditions in outer space."

In addition, metals are being introduced because they are lighter than glass. Through coating and aluminization by special high vacuum deposition processes, higher reflectivity has been achieved in the ultraviolet range, thus enhancing the performance of optical components in outer space.

The surfaces of the metals are polished to such a high quality of accuracy that the specifications so far have not been met by any other craftsmen. So Goddard's optical shop performs the task.

Unique Achievements

The shop has other accomplishments to its credit—

- Fabrication of various digital solar aspect sensors—precision prism assemblies with slits ruled to tolerances of 5 millionths of a meter.
- Development of methods fo tectors to evaluate impacts of met
- Fabrication of fused silica c for the solar simulator in the te division.

Mr. Larmer attributes the shop the teamwork and ingenuity of t tion division personnel.

"In my estimation, some are two to three times beyo the art."

New Challenge

At present a number of areas on to extend the state of the art.

One concerns electro-forming nents from glass masters. This m promise for the mass production

OWEN LAING does preliminary rough grinding of solar aspect sensor prisms. The grinding is done on a cast iron wheel using carborundum dust as an abrasive.

ARTHUR SILFIES studies the pattern reflected on a ronchi grating from a parabolic mirror. The pattern determines what further hand lapping corrections are necessary to the mirror.

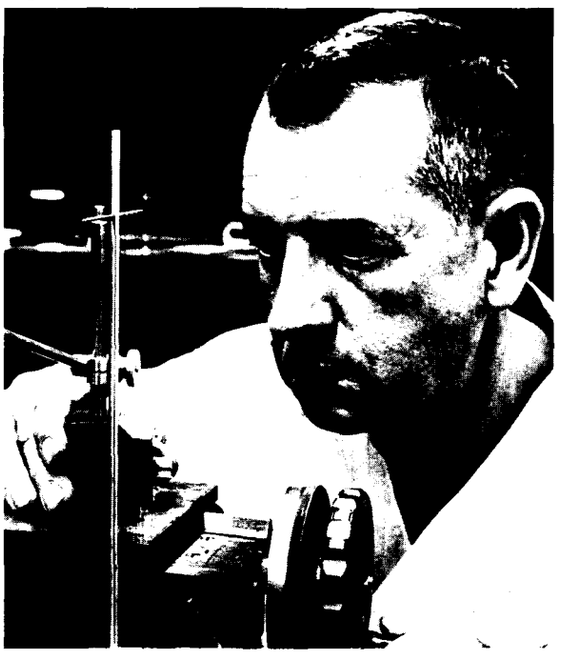

ALBERT TOFT inspects the ne face of a reflector for imperfe have occurred during coating.

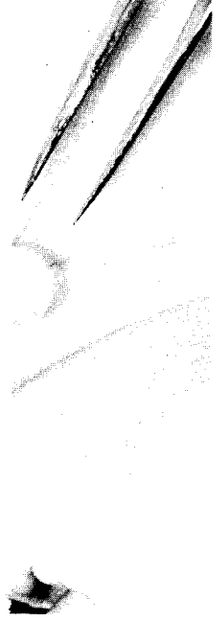

tiny lens manu-
It will be used
unction with the
be (IMP).

EDGE GRINDING is performed on a piece of fused silica to be used in the condenser lens system of the solar simulator modules. A lubricant is poured continuously on the surface of the silica to prevent overheating or fracturing.

JAMES BILLINGSLEY processes acetone through a still. Acetone is used in final cleaning of optical components before placing them in the vacuum chamber. The acetone must be triple distilled to remove all moisture and impurities. The cleaning is necessary to assure good adherence of the coating material.

r fabricating de-
eor dust particles.
ptical components
st and evaluation

's achievement to
e entire fabrica-

f our designs
d the state of

s

are being worked

of optical compo-
ethod shows great
of reflecting op-

tical mirrors, such as ellipsoids, parabolas, and hyperbolas.

One of the immediate tasks of the optical shop is the development of coatings for Goddard satellites to give them proper temperature control. Satellite instruments have to be protected from extremes of both cold and heat so they won't freeze or disintegrate. Progress is now being made in this area.

Another area involves the development of aspheric surfaces—surfaces having varying radii of curvature—to a higher degree of resolution. The result will be high image quality with minimum aberrations.

"The ultimate is to fabricate optical components to diffraction limit specifications," said Mr. Larmer. "When this is accomplished, we will have advanced physical and geometrical optics to their theoretical limit."

LOU JENNINGS applies the art of hand lapping to the last millionth of an inch on an extremely fast parabolic reflector. Hand lapping involves polishing the mirror to a uniform surface.

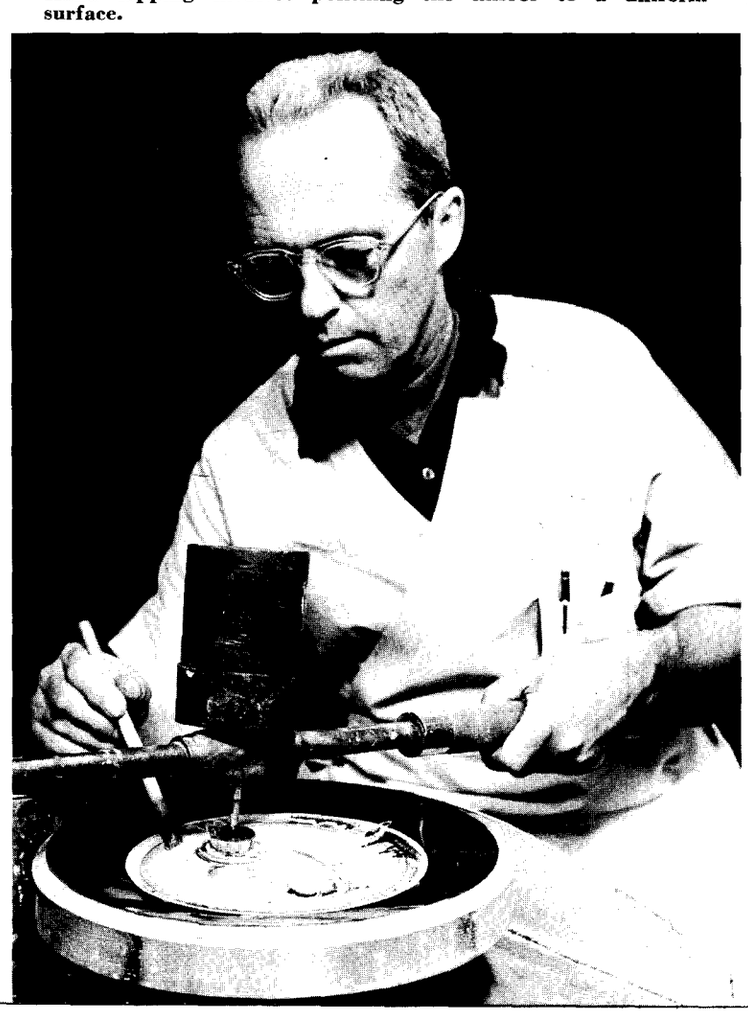

wly coated sur-
ctions that may

BEN CARRICK applies Luxorb coating to the prisms that made up the sensor for Explorer XV. Each prism required five coats of this light-absorbing material.

Rocket Flights, Solar Events Provide New Data on Cosmic Rays and Sun

What are the different types of cosmic rays?

There are two types of cosmic rays, galactic and solar. High speed atomic nuclei which originate outside the solar system and are incident on the earth with nearly constant intensity constitute galactic cosmic rays. Solar cosmic rays originate from some large solar flares and produce increased intensity at the earth lasting for several days.

Biswas

What can we learn from solar cosmic rays?

By studying the energy distribution, intensity and the composition of these particles, information can be obtained about the particle acceleration process at the sun, the characteristics of the intervening space between the earth and the sun and the composition of the sun at the flare site.

What are the methods of studying solar cosmic rays?

Electronic counters and nuclear emulsions are used as detectors carried in balloons, rockets and satellites. The residual atmosphere above balloons absorbs low energy particles before they can reach the detectors. Rockets and satellites carry detectors outside the earth's atmosphere and thus permit the study of these low energy particles.

How are the particles of cosmic rays grouped?

Cosmic rays are usually classified into three components: protons (hydrogen nuclei), helium nuclei and heavy (heavier than helium) nuclei. Heavy nuclei are subdivided into three groups: Light nuclei (lithium, beryllium and boron), medium (carbon, nitrogen, oxygen and fluorine) nuclei and large (heavier than fluorine) nuclei.

What was the composition of solar cosmic rays on Sept. 3, 1960?

The rocket flight on Sept. 3, 1960, gave the first indication of the heavy nuclei in solar cosmic rays. The ratio of medium nuclei to protons was found as one to a few thousand.

Dr. Biswas is a NASA-National Academy of Sciences senior postdoctoral research associate who has been at Goddard since 1961. A native of India, he is a Ph.D. in nuclear physics from the University of Calcutta and in cosmic rays from the University of Melbourne. He presently is on leave from the Tata Institute of Fundamental Research in Bombay. He spoke at the weekly Goddard Colloquium Nov. 9. An interpretation of his talk, "Composition of Solar Cosmic Rays," is presented here.

What additional information was discovered on the composition in November 1960?

A detailed study of the composition of solar cosmic rays could be made from the nuclear emulsion detectors recovered from five rocket flights during the two large solar cosmic ray events in November 1960. The ratio of helium nuclei to protons was found to be about 1 to 30 when particles of the same velocity were compared. Next to helium nuclei, oxygen nuclei was the most abundant type, followed by carbon. The ratio of oxygen to carbon nuclei was 10 to 6.

Small amounts of nitrogen and neon nuclei, about 15 per cent of oxygen, were detected in the solar beam. Nuclei heavier than neon were present in solar cosmic rays in small quantities. Their total abundance was about 15 per cent of oxygen. The nuclei of lithium, beryllium and boron are so rare that their combined abundance is set as less than 2 per cent of oxygen and there is no positive evidence for them. Fluorine nuclei also are rare. This pattern was maintained in all the five samplings.

What do we learn about the sun from these studies?

These studies indicate the sun is capable of accelerating heavy nuclei, in addition to protons and helium nuclei, and probably does so in every major solar cosmic ray event. The mechanism that produces this increased speed and energy is not clearly known. Helium and heavy nuclei are expected to behave in a similar manner in the acceleration process in the solar flare and diffusion process in the solar system. Observations of nearly the same relative abundances of helium and heavy nuclei and similar energy distributions in different rocket flights confirm this.

These results indicate that the relative abundances of helium and heavy nuclei as measured in solar cosmic rays correspond to those of the outer layers of the sun. These results on the composition are in agreement with the spectroscopic measurements of the sun where such determinations can be made. The present study gives the estimates of the relative abundances of helium and neon of the sun which cannot be determined reliably by the spectroscopic method.

How does the composition of solar cosmic rays compare with that of galactic cosmic rays?

There are some marked differences, particularly in the respect of heavy nuclei. The ratio of helium to medium nuclei is 60 to 1 in solar cosmic rays whereas the corresponding ratio in galactic cosmic rays is 13 to 1. The ratios of medium to large nuclei are 7 to 1 and 3 to 1 in solar and galactic cosmic rays, respectively.

What is the significance of the difference of these ratios?

These indicate that the "sun-type" stars are unlikely to be the only source of galactic cosmic rays.

NASA Headquarters Shuffles Duties

As the result of changes in NASA headquarters management structure, Thomas Dixon is given specific responsibility for relations with field centers engaged in other than manned space flight projects.

Mr. Dixon, who for the past year served as deputy associate administrator, will have an area embracing operations at seven installations, including Goddard.

In another change, D. Brainerd Holmes, becomes a second deputy associate administrator to Associate Director Dr. Robert Seamans, Jr., as well as keeping his duties as director of the office of manned space flight. Centers having manned space flight responsibilities now will report to Mr. Holmes.

Goddard Personnel Changes Are Made

A new division, a new division chief, and two new branch heads are the outcomes of Goddard organization and personnel changes.

The new division—the spacecraft integration and sounding rocket division—is headed by Robert Baumann, formerly head of the mechanical systems branch. The division consists of 3 major components—the sounding rocket instrumentation branch, which will continue to be headed by Karl Medrow; the integration systems branch, still to be headed by Allen Franta, and the mechanical systems branch, whose new chief is Frank Martin. The sounding rocket branch was formerly part of the space sciences division, while the integration systems and mechanical systems branches transfer from the spacecraft technology division.

Baumann

The three branches are responsible for the project management, design, development, integration and operations phases of in-house spacecraft and sounding rocket projects.

"These branches have the mutual interests necessary to provide the Center with a smooth, effective and efficient operating division," said Dr. John Townsend, Jr., assistant director for space sciences and satellite applications.

In other personnel changes, Kenneth Foster becomes chief of the financial management division, with Sydney Bradley assistant for budget formulation and accounting. John Donovan, former division chief, moves to the resources programming office with staff responsibilities for resources programming.

Foster

In addition, Henry Maurer, Jr., takes over as head of the thermodynamics branch, replacing John Boeckel who devotes full time as assistant chief of the test and evaluation division.

New Testing Approach To Better Simulate Launch Environment

Spacecraft malfunctions—which sometimes can be caused by the slightest change in position of a valve or other small component—may be more easily detected in future Goddard testing procedures.

Detection of potential malfunction causes will be improved when laboratory testing simulates more nearly the actual environment of the launch phase of the spacecraft.

This can be done by combining separate tests of vibration and acceleration into one test to attempt to create conditions that at launch are not separate but simultaneous.

A pilot facility developed by Goddard's test and evaluation division will determine whether the differences in results obtained by separate testing as compared to combined testing are significant.

"This is the first step in simulating the launch phase of a Goddard satellite," said Edward Kirchman, chief of the structural dynamics branch. "We have been limited in the past by our ability to do such tests simultaneously."

The new task is being accomplished by attaching a modified commercial vibrator to a centrifuge, which looks like a ferris-wheel lying down. The centrifuge tests for acceleration by spinning a spacecraft to such speed that the outward force simulates vertical acceleration during launch.

"We want to be sure we don't lessen the capability of either test in the process of combining," said Neal Grannick, aerospace engineer in the structural dynamics branch. "Even though we've predicted the performance theoretically, we want to define it in actuality."

The first stage of evaluation will be done soon. Actual studies then will be undertaken on scale models or small components.

Results on the initial evaluation of the pilot facility will assist in plans for a larger facility for testing full scale spacecraft under combined environments.

Contributing to the project have been the engineering design branch, which provided design assistance, and Jim Ball, Penn State summer student.

Goddard Coming Events

Lecture: Goddard Colloquium lecture, 3 p.m., Room 231, Bldg. 7, Nov. 20 — Dr. Herbert Friedman, Naval Research Laboratory, "Solar Spectroscopy".

Misc: "Booster" Tetanus Shots, every Tues. and Fri. during the months of Nov. and Dec., Health Unit, Rm. #33, Bldg. 1, between 2 and 3 p.m.

Goddard Employees Welfare Association Dance, Dec. 1, 9 to 1, Bladensburg Fire Hall — Blade Room.

TAKING VIBRATION measurements of the vibrator installed on the centrifuge are John Sutton, instrumentation engineer in the structural dynamics branch, and Fred Krasch, design engineer in the engineering-design branch.

MEMBERS of NASA's newly established industrial applications committee stopped in building 7 during a tour of Goddard to inspect test and evaluation division facilities. Left to right, are Dr. Emanuel R. Piore, vice-president for research and engineering of IBM Corp., New York, (back to camera); John New chief, test and evaluation division; Eugene Wasielewski, associate director; Leopold Winkler, chief of technical services; Louis B. C. Fong, executive secretary of the industrial applications advisory committee, and chief of industrial applications, NASA headquarters; Dr. Howard Turner, vice-president of research and engineering, Jones and Laughlin Steel Company, Pittsburgh; Malcolm M. Hubbard, former vice-president, technical and director of research, ITEK Corp., Cambridge, Mass.; Frederick Neimann, NASA's northeastern office; Samuel Keller, Goddard industrial applications' officer; Edmund F. Buryan, former president of Motec Industries, Minneapolis, (partially hidden); and Dr. Earl Stevenson, special consultant to the administrator.

Goddard Speech and Paper Presentations

(Technical presentations approved as of Nov. 13 for period of Nov. 19-Dec. 2 and late approvals for the past two weeks)

MEETINGS

C. S. Shen, institute for space studies, American Geophysical Union, Nov. 2, Seattle. ***"Thermoionic Screening of Bodies in Atmosphere and Interplanetary Space."***

C. E. Fichtel, space sciences div., Symposium on Protection Against Radiation Hazards in Space, Nov. 5-7, Gatlinburg, Tenn. ***"Composition of Solar Cosmic Rays."***

D. E. Guss, space sciences div., Symposium on Protection Against Radiation Hazards in Space, Nov. 5-7, Gatlinburg, Tenn. ***"Time History of Solar Cosmic Ray Events."***

J. J. Donegan, data operations br., IRE, Catskill Subsection, Nov. 8, Kingston, N. Y., ***"How Electronic Machines are Used in the Operation of the World-Wide Mercury Tracking Network."***

P. D. Lowman, theoretical div., Geological Society of America, Nov. 12-14, Houston, Tex. ***"Magnetic Reconnaissance of Sierra Madera Texas."***

Dr. Su-Shu Huang, space sciences div., (colloquium speaker) National Bureau of Standards, Nov. 13, Wash., D. C. ***"Doppler Broadening of Stellar Spectral Lines."***

R. J. Mackey, communications br., American Rocket Society, Nov. 13-18, Los Angeles. ***"Communications Satellite Programs."***

E. J. Kirchman, test and evaluation div., The American Society of Mechanical Engineers, Nov. 25-30, New York, N. Y. ***"Specification Vibration Testing."***

SPEECHES

C. P. Smith, Jr., communications br., Local chapter dinner of National Association of Refrigerator Engineers, Oct. 30, New Orleans. ***"Telstar and Satellite Communications."***

P. D. Lowman, Jr., theoretical div., Class in Astrogeology at UCLA, Nov. 9, Los Angeles. ***"The Relation of Tektites to Lunar Igneous Activity."***

M. Schach, thermal systems br., 7th lecture of the Dynamic Environment Series, George Washington Univ., Nov. 13. ***"Thermal Environment—Upper Atmospheres."***

Dr. P. Musen, theoretical studies br., Cornell Univ., Nov. 15, ***"Stability of Satellite Orbits."***

C. A. Reber, physics, br., Instrument Division Colloquium at National Bureau of Standards, Nov. 15, Wash., D. C. ***"A Magnetic Mass Spectrometer for Satellite Use."***

R. E. Bourdeau, planetary ionospheres br., Department of Electrical Engineering, Nov. 30, Pa. State Univ., Univ. Park, Pa. ***"Space Flight Studies of the Ionosphere."***

(POGO, from page 1)

Minnesota's contracts for high energy particle and cosmic ray experiments total $50,000. An estimated $260,000 will be required to complete the experiments.

Other contracts include:

University of Chicago, $60,000, energetic particles experiment, $302,000 to complete; State University of Iowa, $50,000, radiation experiment, $222,000 to complete; Dartmouth college, $30,000, emission experiment, $151,000 to complete; Leland Stanford university, $30,000, very low frequency emission experiment, $160,000 to complete.

Second in Series

POGO will be the second launch in the Orbiting Geophysical Observatory (OGO) series. The OGO is a standardized satellite designed to carry a number of scientific experiments and to operate for about one year in any one of a variety of orbits.

The first OGO will be placed in an eccentric orbit of nearly 69,000 miles apogee and 170 miles perigee after being launched from Cape Canaveral in late 1963. It will be known as the Eccentric Orbiting Geophysical Observatory (EGO). POGO will be launched in polar orbit with a perigee of 160 miles and an apogee of 575 miles, circling the earth about every 96 minutes. Its launch is scheduled for early 1964 from PMR.

As the first Orbiting Geophysical Observatory to circle the earth over the polar orbit, POGO will provide an opportunity for new and valuable space science research. Among other things, it will learn more about the earth's magnetic fields, micrometeorites, composition and density of the atmosphere, auroras, and cosmic rays.

Variety of Views

Each experiment aboard OGO is assigned a spacecraft location in accordance with its requirements. Some must look down at the earth; others must look in a direction away from the earth; some must look in the direction of motion of the satellite; and still others must be oriented along an axis pointing toward or away from the sun. Some will be mounted on booms to remove them from disturbing influences of the spacecraft proper, such as magnetic fields and trapped gas.

The OGO will be stabilized so that the same axis constantly points toward the earth. It will be equipped with both gas jets and reaction wheels for attitude control.

Goddard scientists who will have experiments aboard POGO are: Dr. James Heppner, Harold Boroson and Joseph Cain, fields and particles branch—magnetic survey using rubidium magnetometers; Harry Taylor and Henry Brinton, physics branch—Bennett RF ion mass spectrometer, to measure 1-7 atomic mass units (AMU) and 7-45 AMU; George Neuton, physics branch—Bayard-Alpert density gage; Wesley Alexander, Curtis McCracken, Otto Berg and Luc Secretan, astrophysics branch—measurement of micrometeoroids' mass velocity and charge; Robert Bourdeau, planetary ionospheres branch—measurement of ionospheric charged particles and solar ultraviolet (UV) radiation—and Jacques Blamont and Edith Reed of the University of Paris, France, and Goddard's astrophysics branch, respectively; airglow measurements in 6300 angstrom (A), 5577A and UV region.

PRINCIPAL FIGURES in the new data collection system in building 7 inspected the facilities during a special tour. Left to right are Philip Yaffee, head of the electronics test branch; John New, chief of the test and evaluation division; James Allen, chairman of the board of the Booz Allen companies and William Pocock, president of Booz-Allen Applied Research, Inc. Seated and operating the CDC 160–A computer, which processes the data collected by the system, is Meredith Wilson, Goddard project manager. Booz-Allen were consultants to Goddard on development of requirements and specifications for the system.

Attention . . .

Presidents of all internal Goddard clubs, groups, recreation activities and other social organizations are asked to provide in writing a list of all current officers in their organizations to Welfare Council Secretary Alberta Moran, Room 105, Bldg. 1. The information should be sent no later than Nov. 26.

Recent Technical Publications Authored by Goddard Staff

G. L. Hempfling, "Scanning Mechanism For A Satellite Borne X-Ray Spectrometer," NASA Technical Note D-1097, November 1962.

P. T. Cole, H. J. Peake, and C. F. Rice, "Application Of The Modularization Concept To Satellite Tape Recorders," NASA Technical Note D-1451, November 1962.

H. T. Phelan, "Computation Of Satellite Orbits By The Hansen Method As Modified By Musen," NASA Technical Report D-147, November 1962.

H. J. Cornille, "A Method Of Accurately Reducing The Spin Rate Of A Rotating Spacecraft," NASA Technical Note D-1420, October 1962.

(TAVE, from page 1)

vehicle's payloads resulting from a sudden loss of thrust

- Vibrations during the Agena burn phase
- Excitation of the payloads due to fairing separation and
- Spin rate from the rotating antenna pattern

Eight strain gage accelerometers were mounted in lateral and longitudinal directions in the payload interface areas to measure the vibrations and acceleration during launch.

The results of TAVE will aid in insuring the reliability of future Thor Agena launched spacecraft.

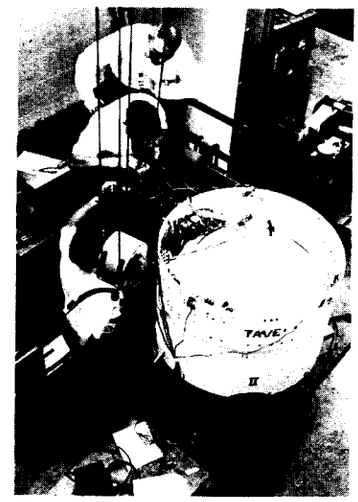

TAVE vibration tests in building 7 are supervised by, top to bottom, Messrs. Wagner, Nagy and Bill Tereniak, mechanical engineer, structural dynamics branch.

TAVE team members interrupt a busy schedule prior to launch of the Alouette spacecraft from PMR. Left to right are George Hinshelwood, spacecraft systems branch, TAVE coordinator; Carl Wagner, mechanical systems branch, design engineer; Jim Nagy, structural dynamics branch, experimenter; Robert Pincus and Richard Young, sounding rocket branch, telemetry engineer and technician, respectively, and John Sween, mechanical systems branch, mechanical technician. Not pictured are Royal Tysdal, systems evaluation branch, test coordinator, and Harrison Wirth, facilities support branch, in charge of procurement.